Queensland Government

TREATMENT PLANT APPROVAL 01/2020

Plumbing and Drainage Act 2018

Approval

1. The Advanced Enviro-septic (AES 38) ("the System") described in the Specifications and Drawings in the attached Schedule and manufactured by Presby Environmental Inc. Whitefield, New Hampshire ("the manufacturer") and supplied by Chankar Environmental Pty Ltd (ACN 148 175 455) ("the supplier") has been assessed in accordance with the Queensland Plumbing and Wastewater Code (QPW Code) dated 15th January 2013.

2. Approval is granted for a secondary quality wastewater treatment system, subject to compliance by the manufacturer/supplier with the requirements of the *Plumbing and Drainage Act 2018*, and the conditions of approval detailed below.

3. This approval, the conditions of approval and the Schedule comprise the entire Treatment Plant Approval document.

4. Any modification by the manufacturer/supplier to the design, drawings or specifications scheduled to this approval must be approved by the Chief Executive.

Conditions of approval

5. The manufacture, installation, operation, service and maintenance of the systems must be inconformity with the conditions of this Treatment Plant Approval.

6. The secondary quality wastewater treatment system, which is an example of the approved systems, may only be used on premises that generate per day:

    a) a maximum hydraulic loading of 38L per lineal metre length of AES piping system
    b) a maximum organic loading of 300mg/L BOD_5
    c) a maximum total suspended solids of 300mg/L.

7. The system must continue to meet the requirements of secondary quality wastewater treatment system, producing the following effluent quality —

    a) 90% of the samples taken must have a BOD_5 less than or equal to 20 g/m^3 with no sample greater than 30 g/m^3.
    b) 90% of the samples taken must have total suspended solids less than or equal to 30g/m^3 with no sample greater than 45g/m^3.

8. Each system must be serviced in accordance with the details supplied in the owner's operation and maintenance manual.

9. The system design is based upon secondary quality effluent design loading rate as defined in AS/NZ1547 using the AES Design Calculator prepared by a qualified designer. System designs must be verified and signed by the supplier before being submitted to the Local Government.

10. A septic tank conforming to AS/NZ 1546.1 and sized in accordance with AS/NZ 1547 for the influent hydraulic load from the dwelling is a component of the system. Waste from the septic tank is to be diverted to the AES piping system prior to the system sand and basal area. The septic tank that feeds into the system must be regularly monitored and maintained (including de-sludging) in accordance with AS/NZ 1547 to ensure optimum operation of the system.

11. When granting a compliance permit, the local government must satisfy itself that the designer's choice of the system configuration is optimal for the proposed use and site conditions and that the effluent can be retained within the land application area.

12. Each application for a compliance permit to install a system must also be accompanied by a copy of a completed Advanced Enviro-Septic Design Calculator Report endorsed by the supplier, showing the footprint/basal area of the proposed system and number of pipe modules for the site.

13. An inspection/sampling point must be installed permanently in the sand immediately below the half-way point of the AES piping system. Where a system is installed in a sloping basal area an additional inspection/sampling point must be installed at the lowest point of the system extension.

14. Routine maintenance of the system at set intervals, other than septic tank sludge levels, is not stipulated by the manufacturer/supplier. However, routine monitoring may be required by the Local Government. In the event of failure of the system's land application area an AES authorised person may need to follow the rejuvenation procedures set out in the manufacturer/supplier's Design and Installation Manual.

15. Where a system installed at a site, has been found not to operate satisfactorily during its service life, and as a result requires modification to achieve the required performance requirements, in particular, water quality limits, the installed system is to be modified accordingly. Any modifications including any of the supplier's rejuvenation procedure outcomes must be recorded on the service report.

16. Permitted use of the effluent is for sub-surface absorption only.

17. Each system must be supplied with —

    (a) a copy of this Treatment Plant Approval document;
    (b) details of the system;
    (c) instructions for authorised persons for its installation;
    (d) a copy of the owner's manual to be given to the owner at the time of installation; and
    (e) detailed instructions for authorised service personal for its operation and maintenance.

Queensland Government

18. At each anniversary of the Treatment Plant Approval date, the supplier must submit to the Chief Executive a list of all systems installed in Queensland during the previous 12 months. Where the Chief Executive is notified of any system failures the Chief Executive may randomly select a number of installed systems for audit. The Chief Executive will notify the supplier's nominated NATA accredited laboratory which systems are to be audited for BOD5 and TSS. The sampling and testing of the selected systems, if required, is to be done at the supplier's expense. The following results must be reported to the Chief Executive;

    a) Address of premises;

    b) Date inspected and sampled;

    c) Sample identification number;

    d) BOD5 for influent and effluent; and

    e) TSS for influent and effluent.

19. The Chief Executive may, by written notice, cancel this approval if the manufacturer/supplier fails —

    a) to comply with one or more of the conditions of approval; or

    b) within 30 days, to remedy a breach, for which a written notice been given by the Chief Executive.

20. This approval may only be assigned with the prior written consent of the Chief Executive.

21. This approval expires on 1 January 2024 unless cancelled earlier in accordance with paragraph 19 above.

Lindsay Walker

Director
Plumbing, Drainage and Special Projects
Building Legislation and Policy
Date approved: 03 March 2020

Level 7,
63 George Street Brisbane
GPO Box 2457, Brisbane Qld 4001
Telephone +61 7 3008 2557
Facsimile +61 7 3237 1248
Website www.hpw.qld.gov.au

ABN 61 331 950 314

Treatment Plant Approval
Approved by: Lindsay Walker
Delegated Authority
Department of Housing & Public Works

Queensland Government

TREATMENT PLANT APPROVAL No. 01/2020
Plumbing and Drainage Act 2018

SCHEDULE

Attachment 1

Specifications, Drawings and Sample AES Design Calculator Report for the

Advanced Enviro-Septic (AES 38)

Treatment Plant Approval
Approved by: Lindsay Walker
Delegated Authority
Department of Housing & Public Works
Queensland Government

APPLICATION FOR PRODUCT ACCREDITATION
(Onsite Wastewater Treatment System)

ADVANCED ENVIRO-SEPTIC (AES-38) SYSTEM COMPONENTS

Advanced Enviro-Septic™ is an effective, passive onsite wastewater treatment system for residential, commercial and community use. Each AES-38 unit is a 3 meter long engineered pipe with outer layers of randomly placed fibres, bio accelerator and non-woven geotextile fabric. The geotextile fabric is sewn together to hold the pipe, fibres and the bio accelerator for easy handling.

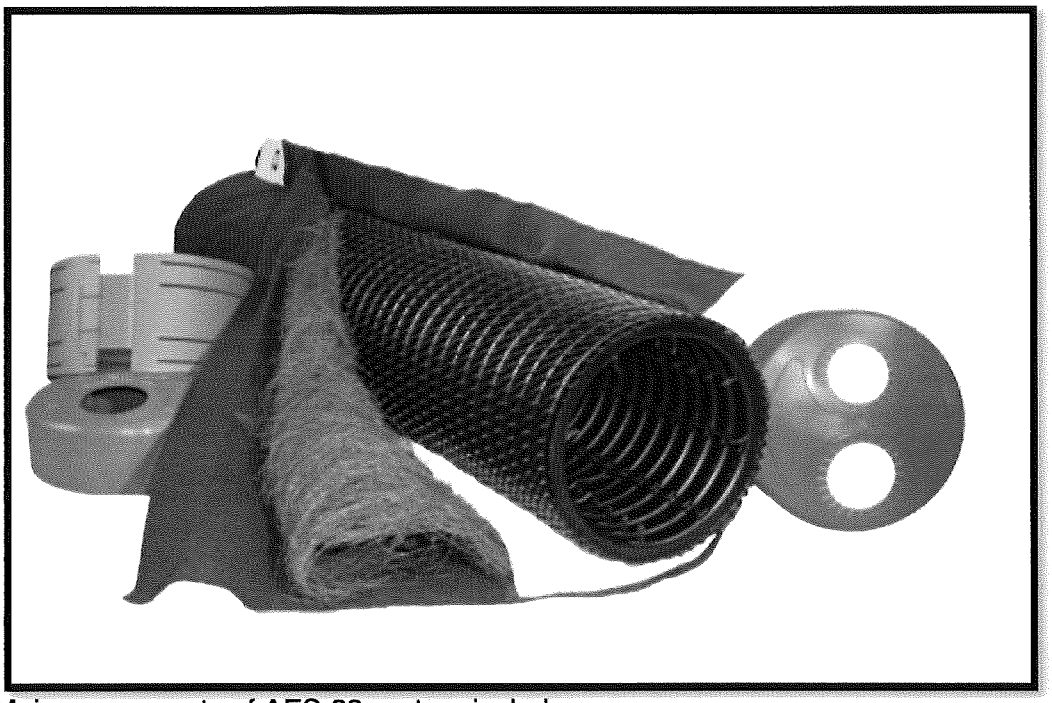

Main components of AES-38 system include;

1. AES Pipe unit (3 meter long pipe) – incorporates corrugation, perforated holes and internal skimmer taps
2. AES Couplings – patented connecter to join the AES pipe units as per the design requirements.
3. AES Offset Adaptor – 308mm diameter cap that has 1 x 92mm pre cut hole 9 (open to suit 100mm PVC pipe). This 92mm hole is for connection to the septic tank outlet and for raised connection between rows of AES-38 pipes. Required number of offset adaptor depends on the resign requirements.
4. Oxygen Demand Vent – 100mm vent cowl with mosquito proof screen.

Treatment Plant Approval
Approved by: Lindsay Walker
Delegated Authority
Department of Housing & Public Works
Queensland Government

AES-38 System Organic Loading and Wastewater Parameters

Model No.	AES-38
INFLUENT	
Hydraulic Load	114 litres per 3 metre long unit
BOD_5	160-300 mg/L
TSS	110-300 mg/L
FOG	50 mg/L (maximum)
PH	6-9
TEMP	5-30 degree celsius
EFFLUENT	
BOD_5	≤ 20mg/L
TSS	≤ 20mg/L

* Wastewater that enters the AES system must be Primary Treated.

Treatment Plant Approval
Approved by: Lindsay Walker
Delegated Authority
Department of Housing & Public Works
Queensland Government

ADVANCED ENVIRO-SEPTIC™ WASTEWATER TREATMENT SYSTEM

TEN STEPS OF WASTEWATER TREATMENT: ADVANCED ENVIRO-SEPTIC™ TREATS EFFLUENT MORE EFFICIENTLY TO PROVIDE LONGER SYSTEM LIFE AND TO PROTECT THE ENVIRONMENT.

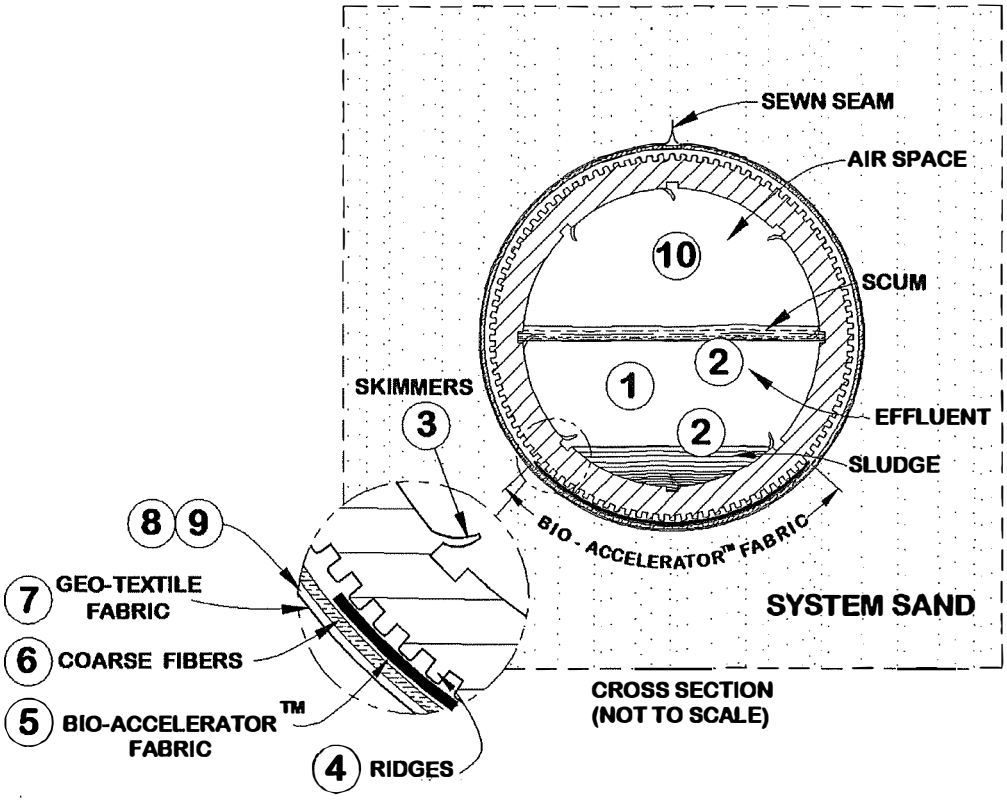

STAGE 1: WARM EFFLUENT ENTERS THE PIPE AND IS COOLED TO GROUND TEMPERATURE.

STAGE 2: SUSPENDED SOLIDS SEPARATE FROM THE COOLED LIQUID EFFLUENT.

STAGE 3: SKIMMERS FURTHER CAPTURE GREASE AND SUSPENDED SOLIDS FROM THE EXITING EFFLUENT.

STAGE 4: PIPE RIDGES ALLOW THE EFFLUENT TO FLOW UNINTERRUPTED AROUND THE CIRCUMFERENCE OF THE PIPE AND AID IN COOLING.

STAGE 5: BIO-ACCELERATOR™ FABRIC SCREENS ADDITIONAL SOLIDS FROM THE EFFLUENT AND DEVELOPS A BIOMAT WHICH PROVIDES TREATMENT AND ENSURES ACCELERATED BIOMAT DEVELOPMENT.

STAGE 6: A MAT OF COARSE RANDOM FIBERS SEPARATES MORE SUSPENDED SOLIDS FROM THE EFFLUENT.

STAGE 7: EFFLUENT PASSES INTO THE GEO-TEXTILE FABRICS AND GROWS A PROTECTED BACTERIAL SURFACE.

STAGE 8: SAND WICKS LIQUID FROM THE GEO-TEXTILE FABRICS AND ENABLES AIR TO TRANSFER TO THE BACTERIAL SURFACE.

STAGE 9: THE FABRICS AND FIBERS PROVIDE A LARGE BACTERIAL SURFACE TO BREAK DOWN SOLIDS.

STAGE 10: AN AMPLE AIR SUPPLY AND FLUCTUATING LIQUID LEVELS INCREASE BACTERIAL EFFICIENCY.

Treatment Plant Approval
Approved by: Lindsay Walker
Delegated Authority
Department of Housing & Public Works

Queensland Government

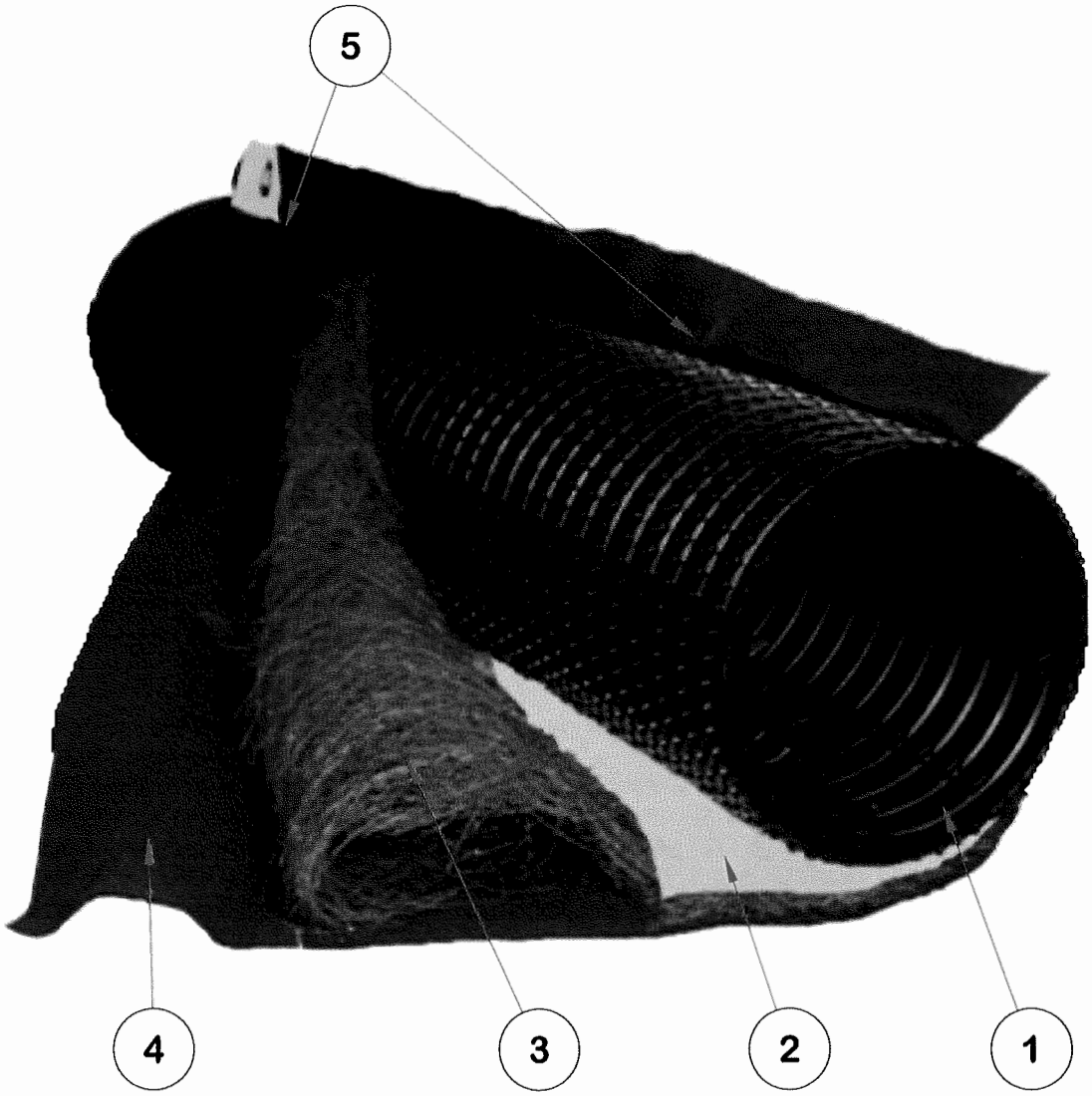

ITEM #	DESCRIPTION
1	PLASTIC PIPE
2	BIO-ACCELERATOR FABRIC (BOTTOM THIRD OF PIPE)
3	RANDOMLY ORIENTED PLASTIC FIBER
4	GEO-TEXTILE FABRIC
5	SEWN SEAM (ALWAYS ORIENTED UP)

The information disclosed in this document, including all designs and related materials, is the valuable property of Presby Environmental, Inc. (PEI) and/or its licensors. PEI and/or its licensors, as appropriate, reserve all patent, copyright and other proprietary rights to this document, including all design, manufacturing, reproduction, use, and sales rights there to, exceptto the extent said rights are expressly granted to others.

Presby Environmental, Inc.
143 Airport Road
Whitefield, NH 03598
800-473-5298
The Next Generation of Wastewater Technology

PART NAME: **ADVANCED ENVIRO-SEPTIC PIPE**

DRAWN BY:	DATE:	SCALE:	SHEET:
PEI	Feb 26, 2013	NONE	1 OF 5

Treatment Plant Approval
Approved by: Lindsay Walker
Delegated Authority
Department of Housing & Public Works
Queensland Government

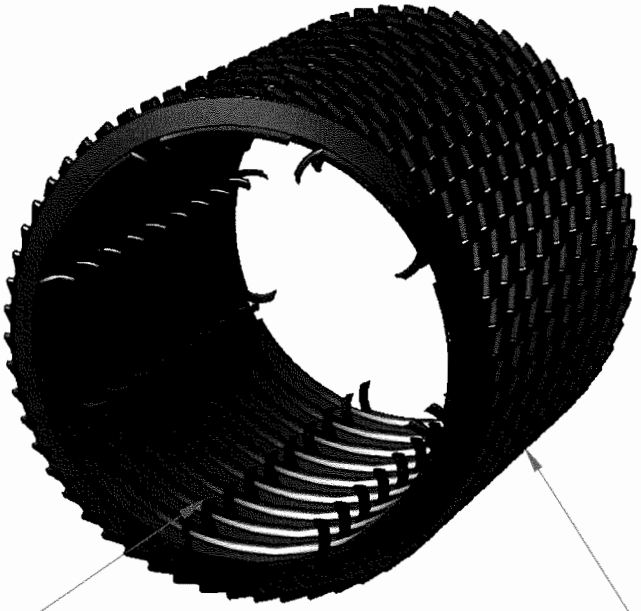

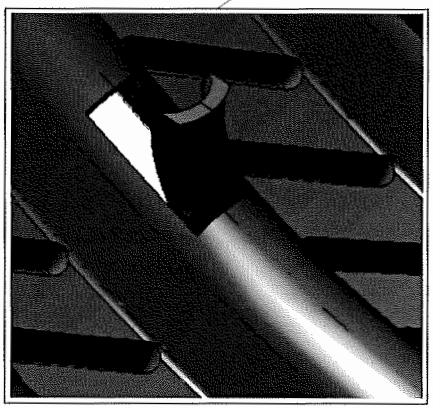

SKIMMER DETAIL
(ENLARGED)

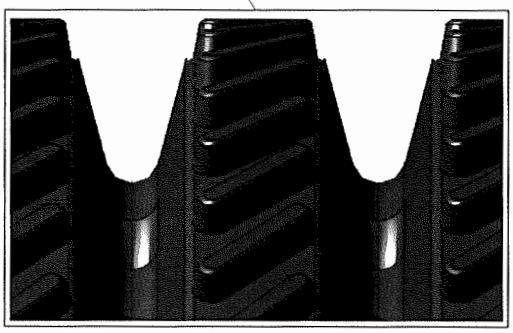

RIDGE & CORREGATION DETAIL
(ENLARGED)

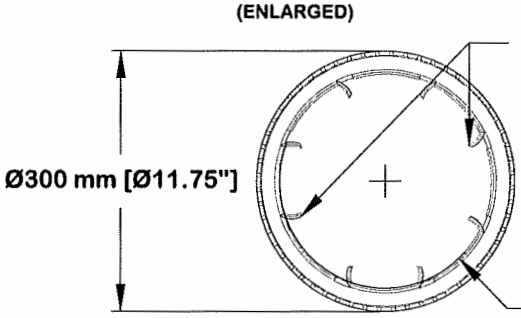

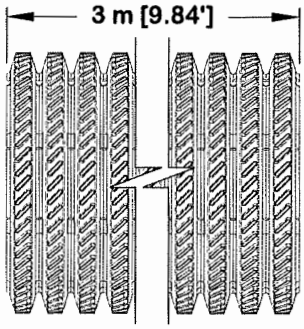

Material: HDPE Plastic

The information disclosed in this document, including all designs and related materials, is the valuable property of Presby Environmental, Inc. (PEI) and/or its licensors. PEI and/or its licensors, as appropriate, reserve all patent, copyright and other proprietary rights to this document, including all design, manufacturing, reproduction, use, and sales rights there to, exceptto the extent said rights are expressly granted to others.

Presby Environmental, Inc.
143 Airport Road
Whitefield, NH 03598
800-473-5298
The Next Generation of Wastewater Technology

PART NAME: ADVANCED ENVIRO-SEPTIC PIPE			
DRAWN BY: PEI	DATE: Feb 26, 2013	SCALE: NONE	SHEET: 2 OF 5

Treatment Plant Approval
Approved by: Lindsay Walker
Delegated Authority
Department of Housing & Public Works
Queensland Government

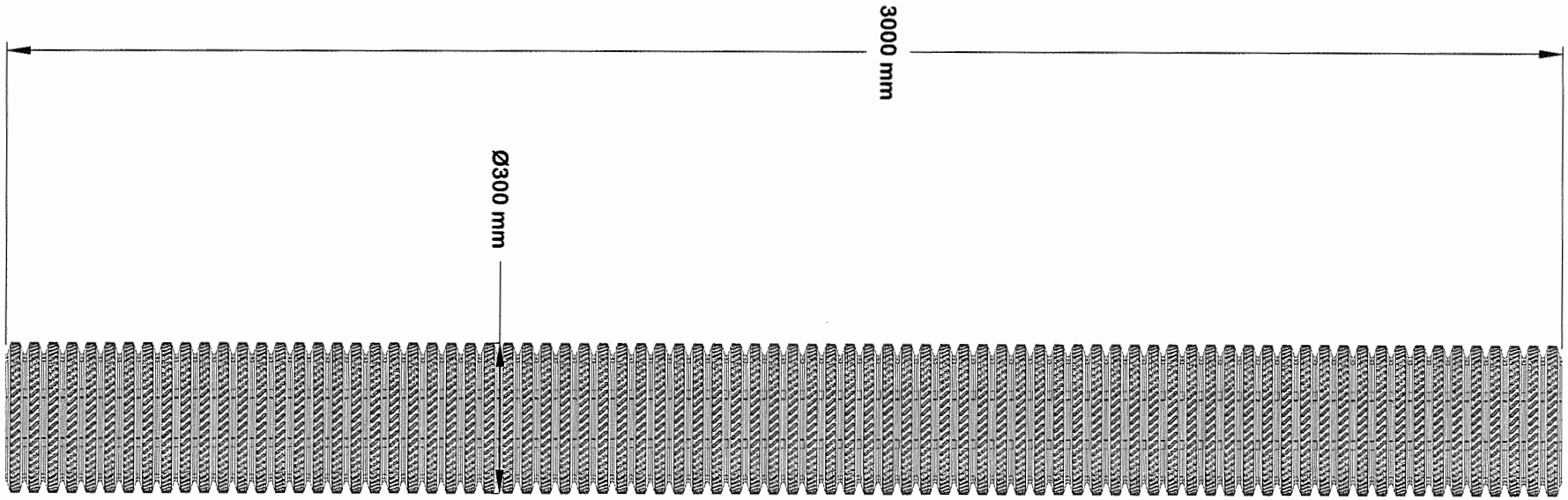

SCALE: 6 mm = 125 mm

The information disclosed in this document, including all designs and related materials, is the valuable property of Presby Environmental, Inc. (PEI) and/or its licensors. PEI and/or its licensors, as appropriate, reserve all patent, copyright and other proprietary rights to this document, including all design, manufacturing, reproduction, use, and sales rights there to, exceptto the extent said rights are expressly granted to others.

Presby Environmental, Inc.
143 Airport Road
Whitefield, NH 03598
800-473-5298
The Next Generation of Wastewater Technology

PART NAME: ADVANCED ENVIRO-SEPTIC PIPE			
DRAWN BY: PEI	DATE: Feb 26, 2013	SCALE: NONE	SHEET: 3 OF 5

Treatment Plant Approval
Approved by: Lindsay Walker
Delegated Authority
Department of Housing & Public Works
Queensland Government

Feb 26, 2013 SHEET: 3 OF 5

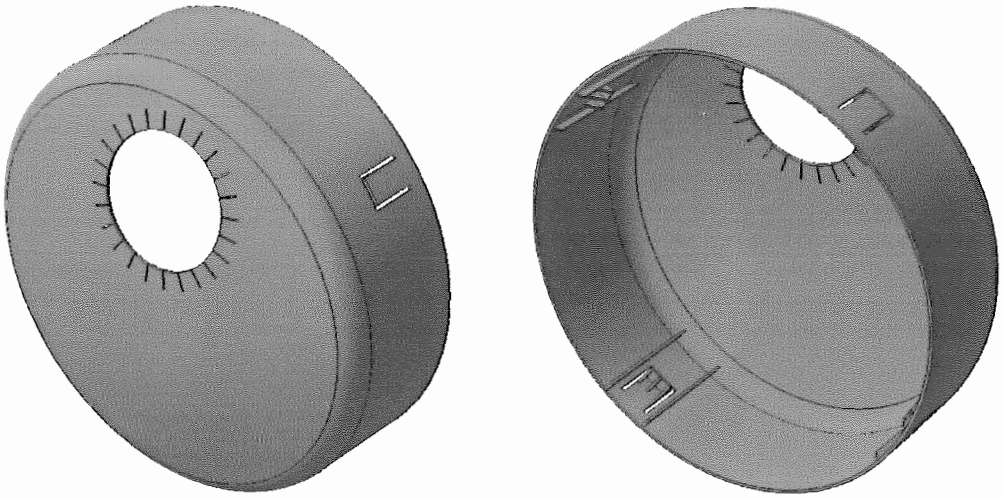

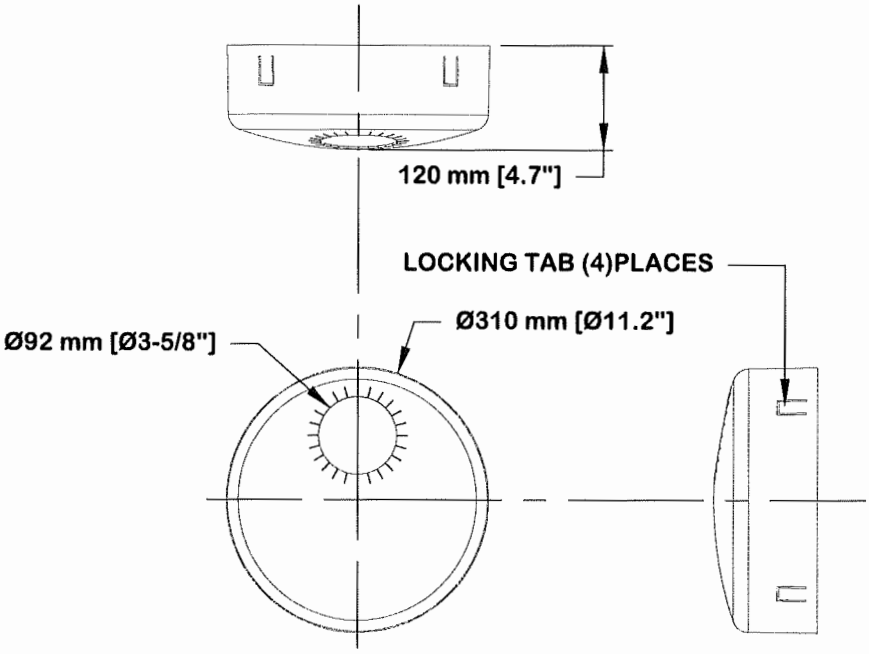

MATERIAL: PLASTIC

The information disclosed in this document, including all designs and related materials, is the valuable property of Presby Environmental, Inc. (PEI) and/or its licensors. PEI and/or its licensors, as appropriate, reserve all patent, copyright and other proprietary rights to this document, including all design, manufacturing, reproduction, use, and sales rights there to, exceptto the extent said rights are expressly granted to others.

Presby Environmental, Inc.
143 Airport Road
Whitefield, NH 03598
800-473-5298
The Next Generation of Wastewater Technology

PART NAME:			
OFFSET ADAPTER			
DRAWN BY: PEI	DATE: Feb 26, 2013	SCALE: NONE	SHEET: 4 OF 5

Treatment Plant Approval
Approved by: Lindsay Walker
Delegated Authority
Department of Housing & Public Works
Queensland Government



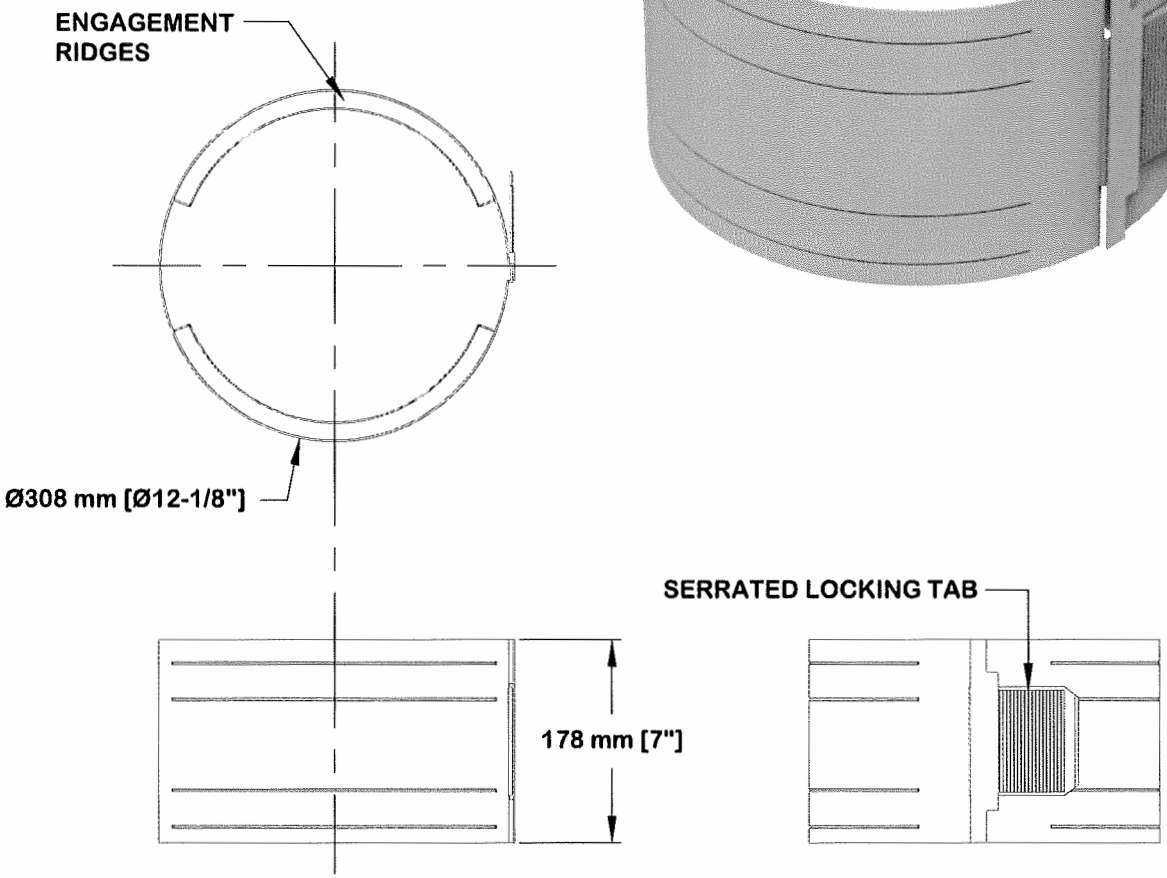

MATERIAL: PLASTIC

The information disclosed in this document, including all designs and related materials, is the valuable property of Presby Environmental, Inc. (PEI) and/or its licensors. PEI and/or its licensors, as appropriate, reserve all patent, copyright and other proprietary rights to this document, including all design, manufacturing, reproduction, use, and sales rights there to, exceptto the extent said rights are expressly granted to others.

Presby Environmental, Inc.
143 Airport Road
Whitefield, NH 03598
800-473-5298
The Next Generation of Wastewater Technology

PART NAME:			
COUPLING			
DRAWN BY: PEI	DATE: Feb 26, 2013	SCALE: NONE	SHEET: 5 OF 5

Treatment Plant Approval
Approved by: Lindsay Walker
Delegated Authority
Department of Housing & Public Works
Queensland Government

ADVANCED ENVIRO-SEPTIC™ "Always The First Option"

Advanced Enviro-septic Design Calculator V8.3

"Always the BEST Option" until site and soil conditions rule it out.

Site Address	Must have Lot or Street number, Address and Post Code				
Client Name	Client details and Contact Phone Number				
Designed By	Name	Designers Ph Number		QBSA Lic Number	
Lic Plumber Name	Must have plumber details before we deliver product, etc..	Plumber Ph Number		Plumb / Drainer Lic Number	
Council Area		AES Certif Number		Date	

This Calculator is a guide only, receiving soil classification, surface water, water tables and all other site constraints addressed by the design.

System Designers site and soil calculation data entry		IMPORTANT NOTES
Is this a new home installation Y or N		>> CHECK THE CONDITION & CAPACITY OF THE EXISTING SEPTIC TANK AS PART OF
Number of person		THIS DESIGN. Remove outlet filters, If you DO NOT REMOVE the filter you
Daily Design Flow Allowance Litre/Person/Day		will need to instal a 100mm, HIGH and LOW VENTS on the AES system.
Number of rows required to suit site constrants		>> The maximum lth of a single AES pipe run is 30 meters
Infiltration surface Soil Category as established by site and soil evaluation. CATEGORY		>> Catagory may require design considerations. Ref AS1547
Design Loading Rate based on site & soil evaluation DLR (mm/day)		>> Soil conditioning may be necessary. Ref AS1547 & Comments.
Bore log depth below system Basel area		>> Min depth below basel area is 600 mm to establish water table or restrictive layer
Enter System footprint Slope in % for standard AES systems to calculate extension		>> Consideration required for Sloping sites. Ref AS1547. refer comment.
Is this design a gravity system with no outlet filter? Y or N		>> A House Vent & LOW VENT required on this system
PLEASE CHECK YOU HAVE FALL FROM TANK TO AES SYSTEM PIPES		

COMMENTS :- " *The outcome must be important to everyone.* "

- Ripping of receiving surface is required in clay soil structures in Cat 4,5,6. In addition refer to AS 1547. Always excavate and rip parallel to the site slope/AES pipe.
- Specialist soils advice and special design techniques will be required for clay dominated soil having dispersive or shrink/swell behaviour. Refer AS1547
- Designers need to be familar with special requirements of Local Authorities. IE - Minimun falls from Septic tank outlets to Land application areas. etc

- Plumbers are reminded that good construction techniques as per AS1547 are especilly important in these soil types. Refer AS1547 & AES installation Instructions

EXAMPLE ONLY

AES System Calculator Outcomes		
Total System load - litres / day (Q)		l/d
Min Length of AES pipe rows to trench loading		lm
Number of FULL AES Pipe Lengths per row		lths
Total Capacity of AES System pipe in Litres		ltr.

AES dimensions	AES System	System Extension
Lth m : (L)		
Width m:(W)		
Sand Depth :		
Area m2		

DO YOU WISH TO USE CUT LENGTHS OF PIPE IN THIS DESIGN? (ENTER Y)			
IF YOU WISH TO USE A TRENCH EXTENSION DESIGN OPTION ENTER "Y"		Enter Custom Width m >	
AES INFILTRATION FOOT PRINT AREA - L = Q / (DLR x W)	Length	Width	Minimum AES foot print required .
for this Basic Serial design is		x =	m2 total

Code	AES System Bill of Materials.		Chankar Environmental Use Only
AES-PIPE	AES 3 mtr Lths required	lths	
AESC	AESC Couplings required		
AESO	AESO Offset adaptors		
AESODV	AES Oxgen demand vent		
AES-IPB	AES 90mm Inspection port base		
AES Equ	AES Speed Flow Equaliser		
	TOTAL SYSTEM SAND REQUIRED (Guide Only)	m3	

PLEASE email your AES CALC and Drawings to
DESIGNREVIEW@ENVIRO-SEPTIC.COM.AU

Designreview@enviro-septic.com.au

> The AES Calculator is a design aid to allow checking of the AES components and configuration and is a guide only. Site and soil conditions referencing the AS 1547 standard are calculated and designed by a Quaillified Designer.

> Chankar Environmental has no responsibility for the soil evaluation, loading calculations or DLR entered by the designer for this calculator.

> AES pipes can be cut to lenght on site. They are supplied in 3 meter lths only.

AES-Design-V8.3-Calculator-Slope-Trench-cut pipe Copy Right - Chankar Environmental pty ltd 2014

Treatment Plant Approval
Approved by: Lindsay Walker
Delegated Authority
Department of Housing & Public Works
Queensland Government